PENTA
HYDRAULIC POWER

Under-body cylinder, ball - pins	Part Number	1107501965001	Tipping weight	23-52 ton

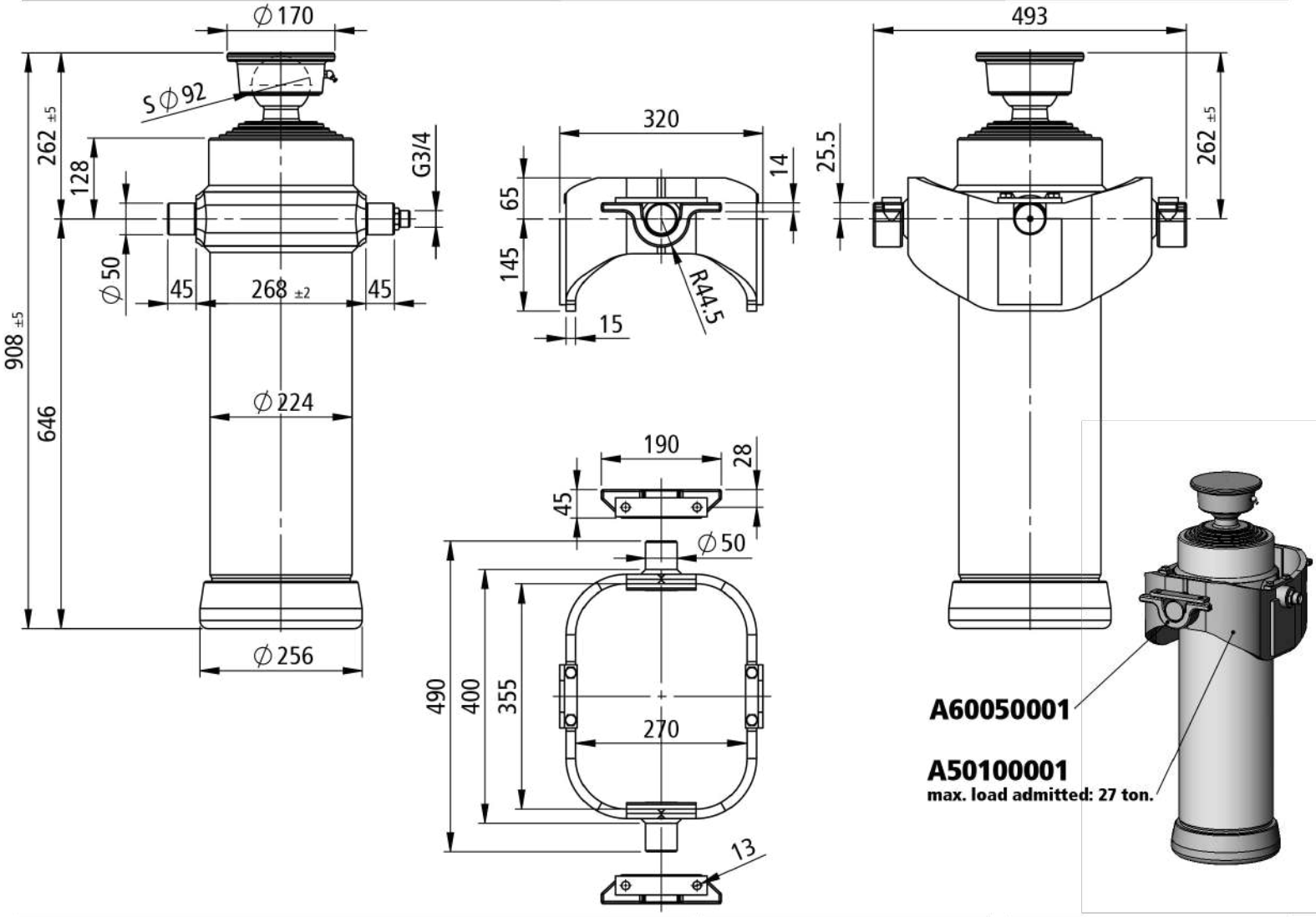

mounting dimension	262 mm + 20 mm min pull out	total stroke	3185 mm	max pressure	200 bar
model: IND750 3185 196 5	code: 1107501965001	weight: 184 kg		HS Penta	

extension	1	2	3	4	5	-	-	-	-	--	--	number of stages: 5
diameter [mm]	196	174	154	135	116	--	--	--	--	--	--	
stroke [mm]	641	637	637	635	635	--	--	--	--	--	--	total: 3185 mm
thrust [kN]	603	476	373	286	211	--	--	--	--	--	--	max thrust admitted: 228 kN
oil [dm³]	19.3	15.2	11.9	9.1	6.7	--	--	--	--	--	--	total: 62.2 dm³